Ignite BBQ Stand

BQIG10ST

Product Features:

- Stand for Ignite compact folding BBQ
- Powder coated metallic finish
- Ignite BBQ wall mounting bracket fixes directly to stand
- Wheels for easy manoeuvring – tilt stand and move to storage after cooking
- Cylinder mounting position
- LPG Cylinders must not be stored indoors

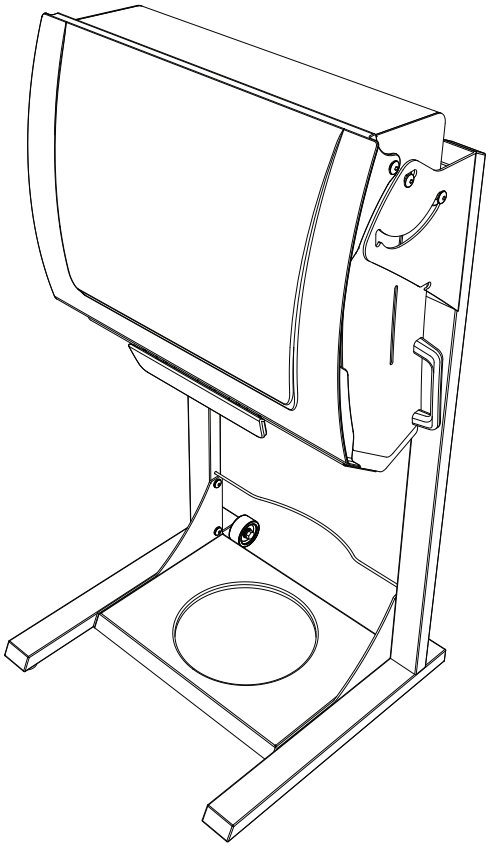

Gasmate® is a registered trademark of: Sitro Group Australia Pty Ltd www.gasmate.com.au
Aber Ltd - Hamilton, N.Z. www.gasmate.co.nz

Important: Retain these instructions for future use.

02849 05/12

EXPLODED DIAGRAM

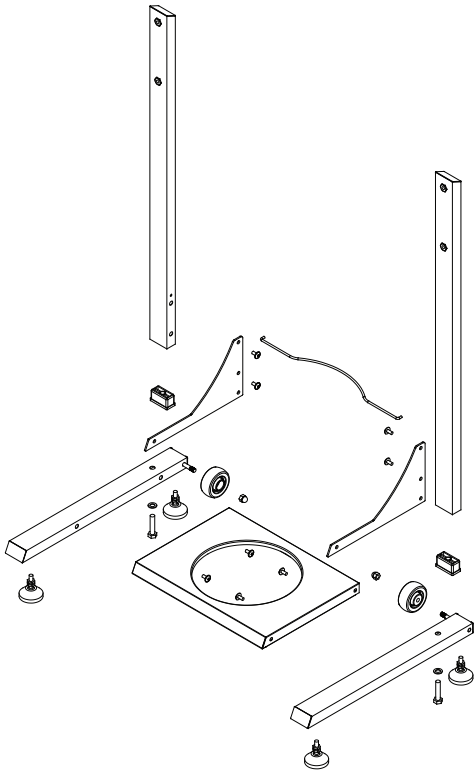

PARTS LIST

1. Left Upright * 1 pc 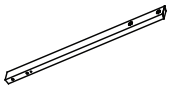	2. Right Upright * 1 pc 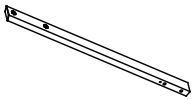	3. Left Beam Assy. * 1 pc 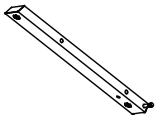	4. Right Beam Assy. * 1 pc 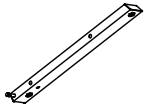	5. Stopper * 2 pcs 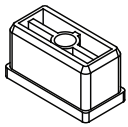
6. Triangle Brace * 2 pcs 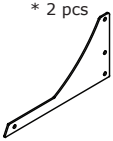	7. Stand Base Panel * 1 pc 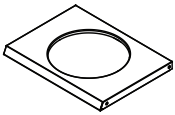	8. Wheel * 2 pcs 	9. Cylinder Holder Brace * 1 pc 	10. Foot * 4 pcs 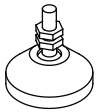
11. M8 Dome Nut * 2 pcs 	12. 3/8*16 Screw * 2 pcs 	13. M6 Allen Head Screw * 8 pcs 	14. Flat Washer * 2 pcs 	15. M8*20 Screw * 2 pcs

ASSEMBLY INSTRUCTIONS

Tools Needed for Assembly

- Hex Wrench (Allen Key) is included
- Adjustable wrench

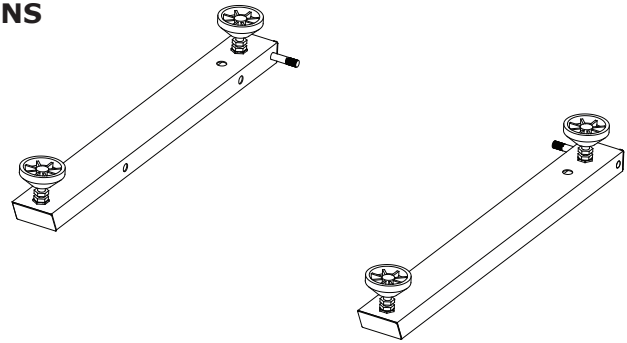

STEP 1

Unpack the Stand and remove all packaging material.

Attach foot * 4 pcs beneath left and right beam assemblies, but only hand tighten.

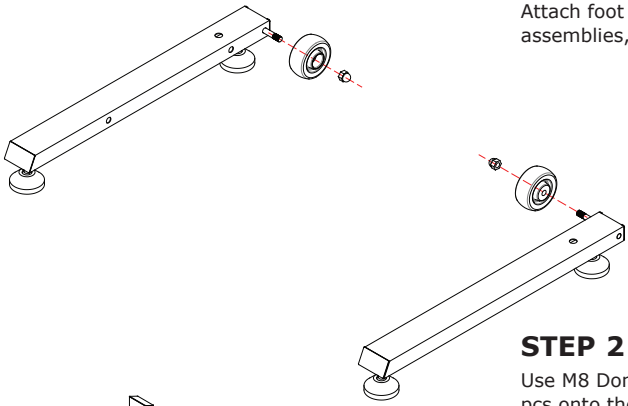

STEP 2

Use M8 Dome Nuts * 2 pcs to attach wheels * 2 pcs onto the left and right Beams.

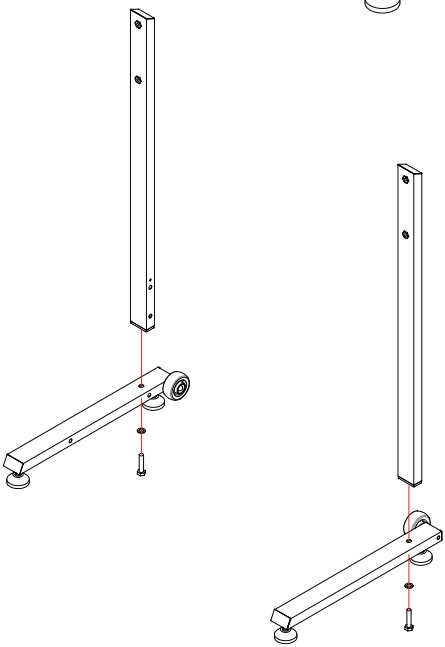

STEP 3

Use the 3/8*16 Screw * 2 pcs and Flat Washers * 2 pcs to fix Left and Right Uprights onto the left and right Beams respectively. And then tighten the screws.

STEP 4

Use M6 Allen head Screw * 4 pcs to fix the Triangle Brace * 1 pc and Stand Base Panel * 1 pc onto the Left Beam and Upright.

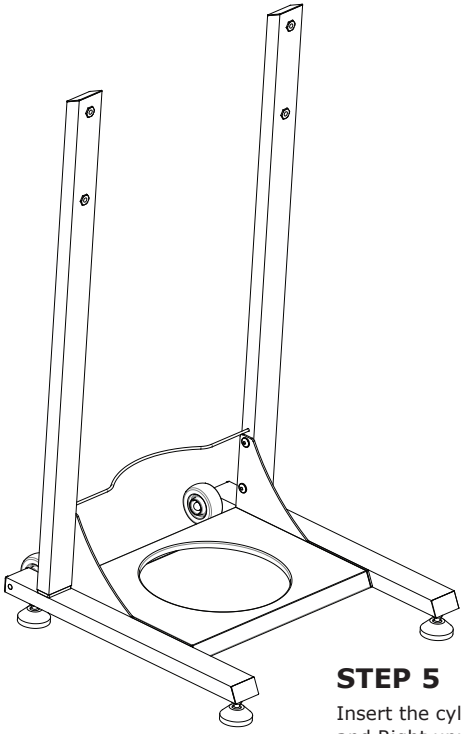

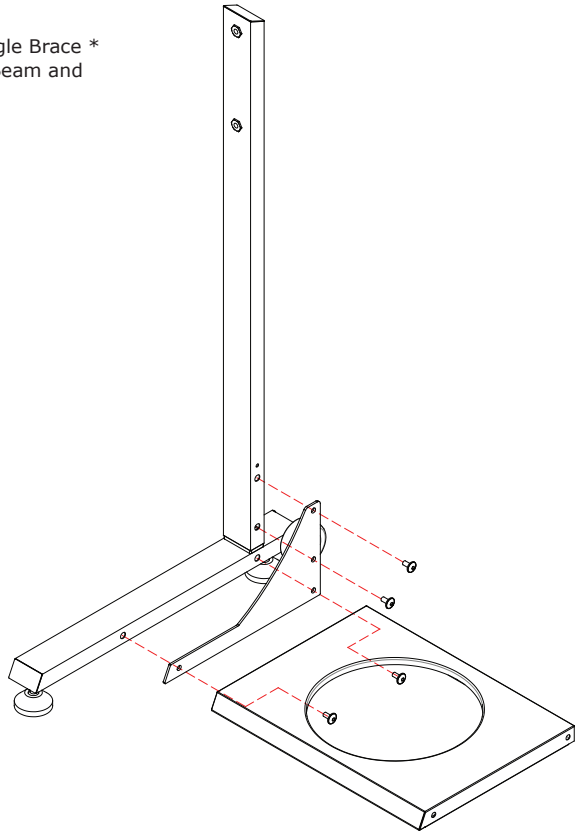

STEP 5

Insert the cylinder holder brace into the corresponding holes on the Left and Right uprights; then repeat Step 4 with the Right Beam and Upright. Adjust the foot * 4 pcs to make the stand steady on the floor, then tighten the lock nuts.

For any queries or assistance call

Customer Service

Australia Only

1300 174 876

Hours of operation: Monday to Friday 8.30am - 5.30pm EST

Do not return to place of purchase.

Keep your purchase receipt, this will be required to make any claims under the 12 month warranty.